AE 6190 HD Front Board Circuit

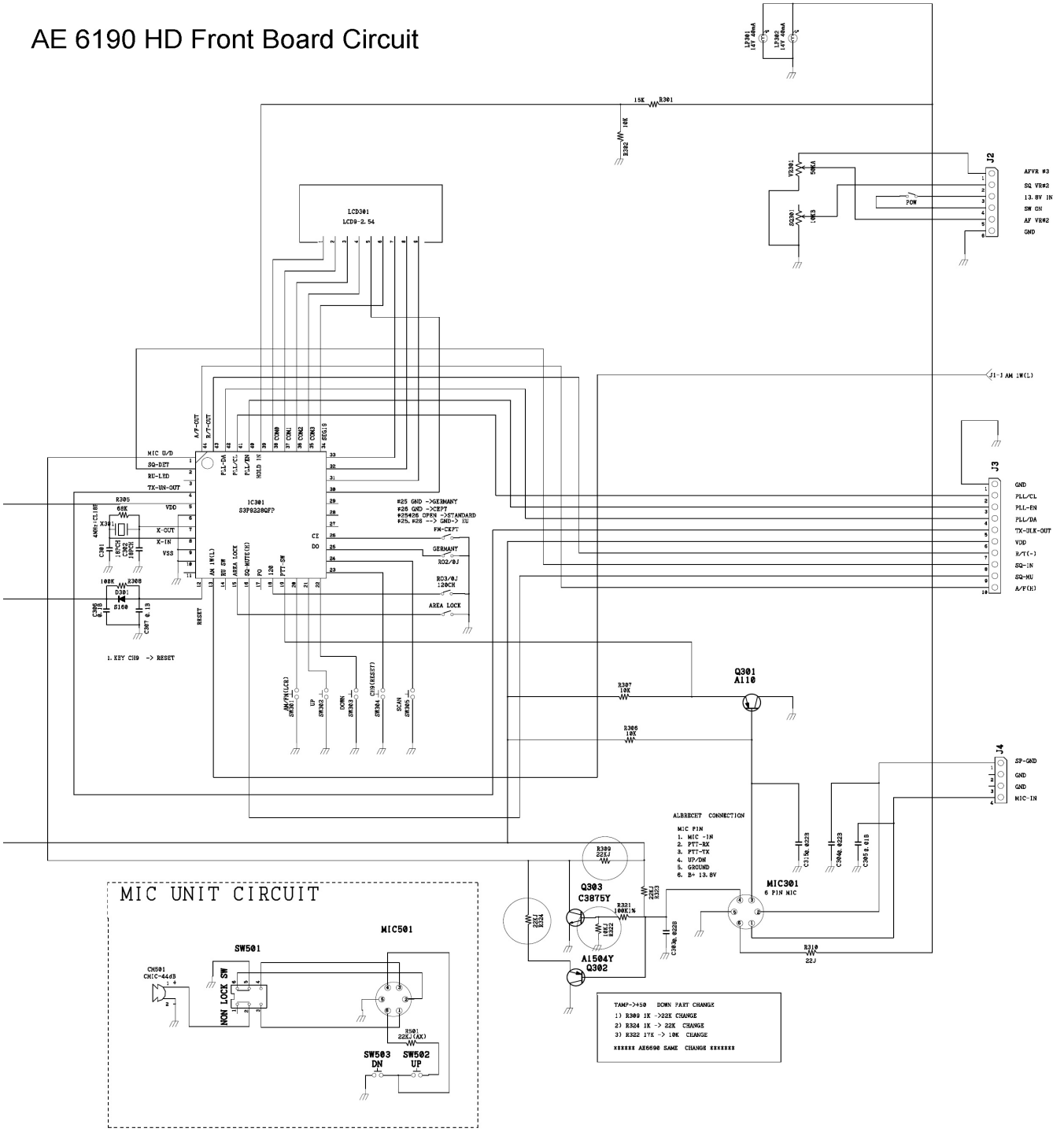

MIC UNIT CIRCUIT

	AE6190HD FRONT
REV: 07/08/14	